Accepted Manuscript

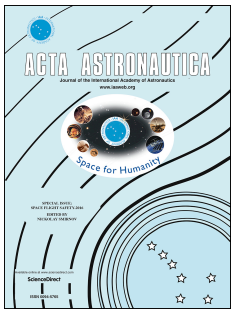

Flow characteristics of a pintle injector element

Peng Cheng, Qinglian Li, Huiyuan Chen

PII: S0094-5765(18)30988-3

DOI: 10.1016/j.actaastro.2018.10.020

Reference: AA 7141

To appear in: *Acta Astronautica*

Received Date: 7 June 2018

Revised Date: 31 July 2018

Accepted Date: 9 October 2018

Please cite this article as: P. Cheng, Q. Li, H. Chen, Flow characteristics of a pintle injector element, *Acta Astronautica* (2018), doi: https://doi.org/10.1016/j.actaastro.2018.10.020.

This is a PDF file of an unedited manuscript that has been accepted for publication. As a service to our customers we are providing this early version of the manuscript. The manuscript will undergo copyediting, typesetting, and review of the resulting proof before it is published in its final form. Please note that during the production process errors may be discovered which could affect the content, and all legal disclaimers that apply to the journal pertain.

ACCEPTED MANUSCRIPT

Flow Characteristics of a Pintle Injector Element

Peng Cheng [1,2], Qinglian Li [1,2*], Huiyuan Chen [1,2]

1. Science and Technology on Scramjet Laboratory, National University of Defense Technology, Changsha 410073, China

2. College of Aerospace Science and Engineering, National University of Defense Technology, Changsha 410073, China

Abstract

The flow characteristics of a pintle injector element were studied by theory and experiments. A spray angle model was firstly proposed based on our previous work, and then a model on the discharge coefficient of the orifice was also derived. Then, experiments were conducted by a pintle injector element which was simplified from pintle injectors with discrete radial orifices. Snapshots of the sprays were captured by using backlit photography technique. Results show that the pintle injector forms an arched cloak-like spray. The spray pattern and breakup are heavily related to the local momentum ratio and Reynolds numbers of jet and film. The spray angles obtained from the snapshots coincide with theory well. Meanwhile, a semi-empirical model of discharge coefficient of the orifice was proposed based on the experiments. It is found that the spray angle and discharge coefficient are dominated by the local momentum ratio. The spray angle and discharge coefficient increase along with local momentum ratio and tend to be stable for large local momentum ratios. Besides, discharge coefficient of the orifice is also found to be slightly affected by the ratio of jet diameter to film thickness.

Keywords: Liquid rocket engine, pintle injector, spray angle, discharge coefficient

1 Introduction

Pintle injector is one of the excellent injectors for liquid rocket engines[1]. Compared to other injectors, the pintle injector is advantageous by its low cost, intrinsic combustion stability, deep throttling and high flux per unit. The Lunar Module Decent Engine (LMDE) is a paradigmatic example. Despite of the recent advances in last decade[1, 2], a deep and thorough study on the pintle injector is still limited [3].

Generally, a thrust chamber has only one pintle injector [4]. Therefore, the flow field in combustion chamber is not uniform, which differs from that in a thrust chamber equipped with traditional injector array. Previous investigations [5-7] suggest that the recirculation flow patterns inside the combustion chamber are extremely

*Corresponding author: peakdreamer@163.com

ACCEPTED MANUSCRIPT

important for combustion [4, 8]. For example, the recirculation zones can benefit the combustion stability. In addition, the spray also plays an important role. It determines not only the recirculation zones but also the flame structures. Optical measurements conducted by Sakaki et al. [9] also suggest that the flame structure is highly dependent on the spray structure.

Accordingly, the characteristics of flow and spray are key features dominating the combustion process inside a pintle injector engine. Son et al. [10, 11] proposed a design procedure by studying the spray characteristics of a gas-liquid pintle injector [12]. Fang and Shen [5] studied the effects of main structure parameters on atomization cone angles by cold experiments using a gas-liquid pintle injector. In our previous work [13], we studied the liquid-liquid pintle injectors by theoretical, numerical and experimental methods, based on which, we successfully proposed a formula to predict the spray angle. It is noted that these investigations were mainly focused on a hollow cone spray formed by pintle injectors which have continuous radial slot. However, most of the pintle injectors in real rocket engines (such as LMDE and TR106 [1]) have discrete radial slots or orifices. They are thought to be better for mixing. Despite this, the related studies are still limited. Ninish et al. [14] investigated liquid-liquid pintle injectors with discrete orifices by cold experiments. The investigation focused on the breakup process without the consideration of the spatial distribution. Santoro and Merkle [8] investigated the sprays of pintle injectors with discrete radial slots by using water as simulants. They found that the spray angle increased along with momentum ratio, but no model was proposed for predicting the spray angle. The spray angle is an important parameter which characterizes the spatial distribution of the spray. Therefore, a quantitative model of spray angle is indispensable for the design of pintle injector. Moreover, the discharge coefficient is an important design parameter for injectors, because it connects the flow rate and pressure drop. The discharge coefficient of an orifice has been studied widely [15, 16], many models have been proposed. For a pintle injector, the discharge coefficient of the orifice can be influenced by impingement with the axial flow. However, the effects of the impingement are not clear and the related investigation has not been found.

In this study, the pintle injectors with discrete orifices were simplified into a pintle injector element. The spray features of the pintle injector element were presented and the effects of working condition were discussed. Based on the theoretical analysis, a new model to describe the spray angle and discharge coefficient of the injector was proposed. Moreover, the effects of operating condition and geometry on the spray and discharge coefficient were discussed.

2 Experimental Methods

2.1 Pintle injector element

Fig. 1 shows the schematic of the pintle injector with discrete orifices. In the pintle injector, one of the propellants is injected from an annular slot axially, and the other is ejected radially through a series of holes or slots near the tip of the pintle [3]. In this case, the radial flow and axial flow can impinge each other near the orifices. As mentioned in our previous studies, the inner flow inside the sprays cannot be visualized clearly because it was covered by outer sprays. In order to reveal the inner flow, an injector element was picked out in this work, as marked by red box in Fig. 1, and the annular film was further simplified into a planar film. Fig. 2 shows the configuration and main dimensions of the pintle injector element. The film thicknesses of pintle injector elements were 0.39mm, 0.52mm, 0.81mm and the jet diameters were 1.03mm, 1.58mm.

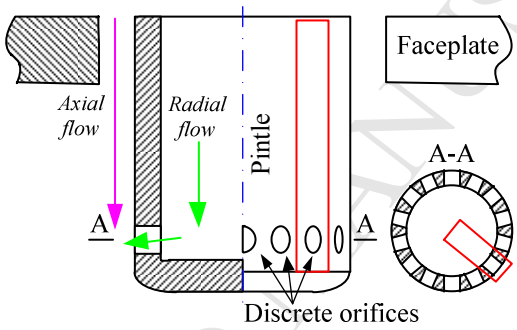

Fig. 1 Schematic of the pintle injector with discrete orifices.

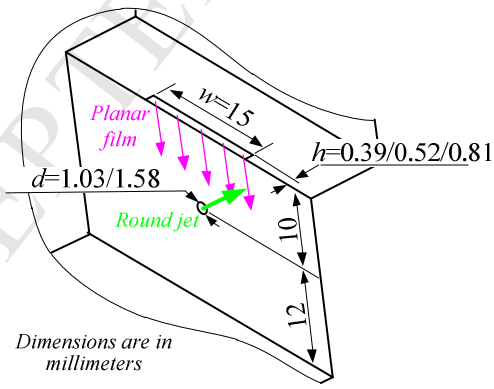

Fig. 2 Configuration and dimensions of the pintle injector element.

2.2 Experimental setup

Fig. 3 shows the experimental setup, which is similar to reference [13].The cold experiments were conducted at atmospheric conditions with filtered water as simulants for both jet and film flows, and the simulants were pressurized by high pressure nitrogen and fed to the pintle injector element. The volume flow rates and the injection pressures were measured independently by turbine flow meters and pressure transducers.

The backlit photography technique was adopted to visualize the instantaneous spray. A high speed camera (Photron Fastcam SA-Z) was used to record the sprays and a LED array were used as backlight. The images were recorded with a frame rate of 20000 fps and the exposure time was 10μs.

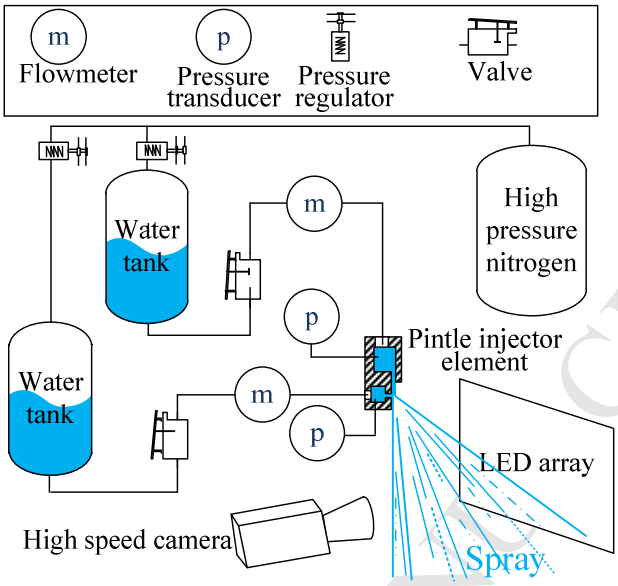

Fig. 3 Test rig overview with measurement devices.

3 Theoretical analysis

In our preceding work on pintle injectors with axial annular sheet and radial planar sheet [13], a experimentally and numerically validated formula, as shown in Eq. (1), was derived to predict the spray angle.

$$\begin{cases} \theta = \arccos \dfrac{1}{1+TMR} \\ TMR = \dfrac{\dot{m}_j v_j}{\dot{m}_f v_f} \end{cases} \tag{1}$$

where TMR is the total momentum ratio. $\dot{m}_j$ and $\dot{m}_f$ are mass flow rates of the jet and the film. v_j and v_f are velocities of the jet and the film.

However, Eq. (1) cannot be used for pintle injectors with radial orifice, because the radial flow is injected from orifices rather than continuous slot which has the same width with the axial flow. Therefore, the assumption that the interaction between the round jet and planar film only occurs within range of the orifice is made. In other word, only the part of planar film upstream the orifice with width of d impinges the round jet, as shown in Fig. 4. Similar to TMR, local momentum ratio (LMR) is thus defined as:

$$LMR = \frac{\dot{m}_j v_j}{\frac{d}{w} \dot{m}_f v_f} \tag{2}$$

where d is the diameter of the jet, w is the width of the film, the denominator is the momentum of the part of film which impinges the jet.

Replacing the *TMR* in Eq. (1) by *LMR*, the spray angle of the pintle injector element can be predicted by Eq. (3):

$$\theta = \arccos \frac{1}{1+LMR} \tag{3}$$

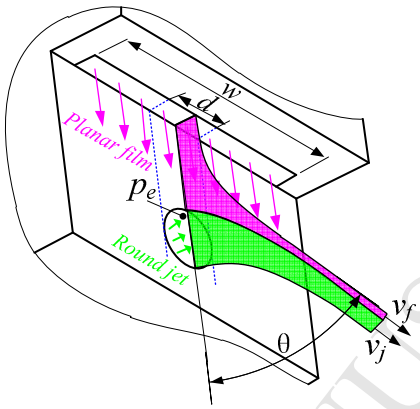

Fig. 4 Sketch of the impingement of liquid film and jet.

In our previous study, we found that a local high pressure zone lay at the exit of the radial slot due to the impingement of axial film and radial film. Then it is reasonable to assume that there is also a local high pressure zone near the exit of the orifice for the pintle injector element.

If the orifice injects propellants alone, the mass flow rate of the orifice can be written as:

$$\dot{m}_j = Cd_o A_j \sqrt{2\rho_j (p_j - p_e)} \tag{4}$$

where A_j is the area of the orifice, p_j is the pressure in manifold and p_e is the area-averaged pressure in the exit of the orifice. Cd_o is the discharge coefficient of the orifice without influence of the liquid film. It can be predicted by the following equation [17].

$$Cd_o = \left[\frac{1}{0.868 - 0.0425\sqrt{l/d}} + \frac{20}{Re}\left(1 + 2.25\frac{l}{d}\right) - \frac{0.005 \cdot l/d}{1 + 7.5\left(\log 0.0015Re\right)^2} \right]^{-1} \tag{5}$$

where l is the length of the orifice, Re is the Reynolds number.

In Eq. (4), the pressure drop of the orifice is the difference between p_j and p_e. However, the pressure drop is generally defined as the difference between pressure in manifold and ambient pressure (p_a). Considering that p_e is larger than p_a due to the local high pressure zone, the discharge coefficient with influence of the film (Cd_j) can be different. Equation (4) was thus be rewritten as:

$$\dot{m}_j = Cd_j \cdot A_j \sqrt{2\rho_j \left(p_j - p_a\right)} \tag{6}$$

The force, which results from the local high pressure zone, swerves the liquid film. Considering the momentum equation, the following equation is obtained:

$$\left(p_e - p_a\right) A_j = K \cdot \frac{d}{w} \cdot \dot{m}_f v_f \sin\theta \tag{7}$$

where K is a coefficient which means only parts of the liquid film were swerved to the maximum angle.

Substituting Eqs. (4) and (6) to Eq. (7), and replacing K·sinθ by J for simplicity, we get:

$$\left(\frac{1}{Cd_j^2} - \frac{1}{Cd_o^2}\right) = 2J \cdot \frac{d}{w} \frac{\dot{m}_f v_f}{\dot{m}_j^2} \rho_j A_j \tag{8}$$

Neglecting the pressure loss and according to Bernoulli's theorem, we have:

$$p_j = p_a + \frac{1}{2} \rho_j v_j^2 \tag{9}$$

Substituting Eq. (9) to Eq. (6), we obtain:

$$\dot{m}_j = Cd_j \cdot \rho_j v_j A_j \tag{10}$$

Then substituting Eq. (10) into Eq. (8) leads to:

$$\left(\frac{1}{Cd_j^2} - \frac{1}{Cd_o^2}\right) = 2J \cdot \frac{d}{w} \frac{\dot{m}_f v_f}{Cd_j \dot{m}_j v_j} \tag{11}$$

Noting $LMR = \frac{w}{d} \frac{\dot{m}_j v_j}{\dot{m}_f v_f}$, Eq. (11) becomes:

$$\left(\frac{1}{Cd_j^2} - \frac{1}{Cd_o^2}\right) = \frac{2J}{Cd_j LMR} \tag{12}$$

Then solve Eq.(12) (a quadratic equation), we have:

$$Cd_j = \sqrt{Cd_o^2 + \left(\frac{J \cdot Cd_o^2}{LMR}\right)^2} - \frac{J \cdot Cd_o^2}{LMR} \tag{13}$$

Meanwhile, a correction factor of the discharge coefficient, which represents the effects of liquid film on the discharge coefficient, is defined:

$$Cf = \frac{Cd_j}{Cd_o} \tag{14}$$

4 Results and Discussion

4.1 Spray features

Fig. 5 exemplifies the spray formed by the pintle injector element from different angle of view. It can be seen that the spray is complex when compared with sprays formed by other traditional injectors, such as hollow cone spray (swirl injector) [18, 19], leaf-like sheet (like-doublet impinging injector) [20]. The round jet and a part of the film impinge at the vicinity of the orifice, which change their directions. The jet is deformed in a manner that is similar to the deformation of jet in a splash plate injector [21], and the deformation of the film is

ACCEPTED MANUSCRIPT

also similar to that of a film encountering a wedge. The deformed jet and film were spread out, which subsequently forms the arched cloak-like spray.

The spray pattern and breakup are heavily influenced by *LMR*, jet Reynolds number and film Reynolds number. Some representative sprays are shown in Fig. 6. As can be seen, the spray angle increases as the *LMR* increases. When Reynolds numbers are small, a smooth fan sheet is formed, as shown in Fig. 6a. The fan sheet becomes thinner and finally breaks up into droplets as it flows downstream. For larger Reynolds numbers, the spray breaks up easier due to larger inertia force, as shown in Fig. 6b. When the Reynolds numbers increase further, the spray pattern becomes a fully developed fan spray. The spray breaks up near the impingement point due to strong interaction between the planar film and the jet, as shown in Fig. 6c. Small area of liquid sheet is observed to be adjacent to the impinging point. Most areas of the spray are occupied by droplets.

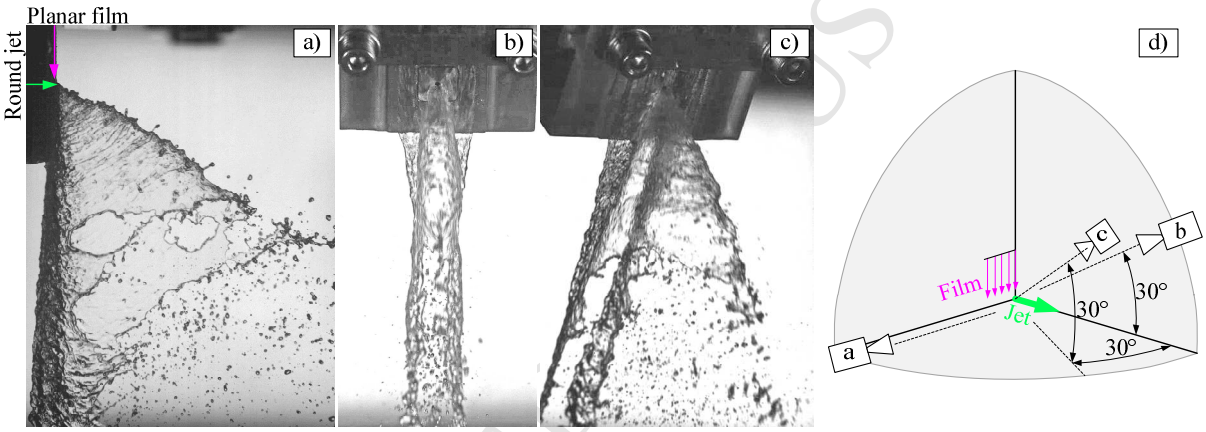

Fig. 5 Sprays from different angle of view (a~c) and the corresponding angle of view (d).

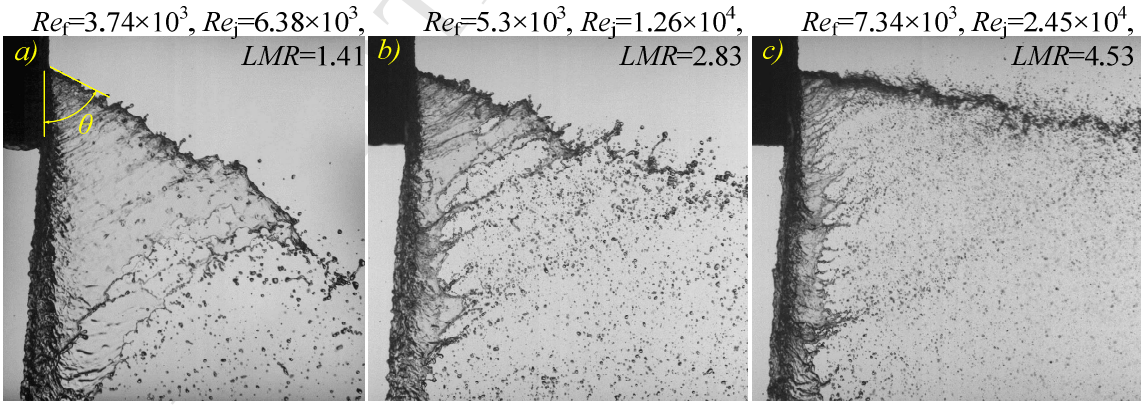

Fig. 6 Representative sprays at different conditions.

4.2 Spray angle

Fig. 7 shows the dependence of spray angle on *LMR*. The experimental local momentum ratio is calculated by $LMR = \frac{w}{d}\frac{\dot{m}_j}{\dot{m}_f}\sqrt{\frac{p_j - p_a}{p_f - p_a}}$. This equation is based on Eq.(2), and the velocities in Eq.(2) are calculated

through Bernoulli's theorem, as shown in Eq.(9). The spray angles were measured directly from the experimental images. As can be seen, the spray angle increases with the increase of the *LMR*. Meanwhile, the experiments coincide well with theory (based on Eq.(3)). Spray angle-*LMR* scatters of pintle injector elements with different geometrical parameters are almost over-lapped. Therefore, *LMR* dominates the spray angle. The geometrical parameters and operating conditions influence the spray angle by changing *LMR*.

The differences can be found by careful observations. Experimental spray angles are slightly smaller than that predicted by theory when *LMR* is less than 1.5, and they are slightly larger than theory value when *LMR* is greater than 1.5. When *LMR* is less than 1.5, the inertia of the jet is weaker than the film. Then the jet is deformed and extruded to the sides of jet like a splash plate injector [22]. This means that the jet is expanded more in the transverse direction. Then the jet impinges with more planar film. The width of the film (Δ), which impinges the jet, is larger than the diameter of the jet (*d*), as shown in Fig. 8a. As a result, the actual local momentum ratio decreases and the spray angle decreases. When *LMR* is greater than 1.5, the inertia of the jet is stronger and the deformation of the jet becomes smaller. Subsequently, less planar film impinges with the jet. The width of the film (Δ), which impinges the jet, is smaller than the diameter of the jet, as shown in Fig. 8b. As a result, the actual local momentum ratio increases and the spray angle increases.

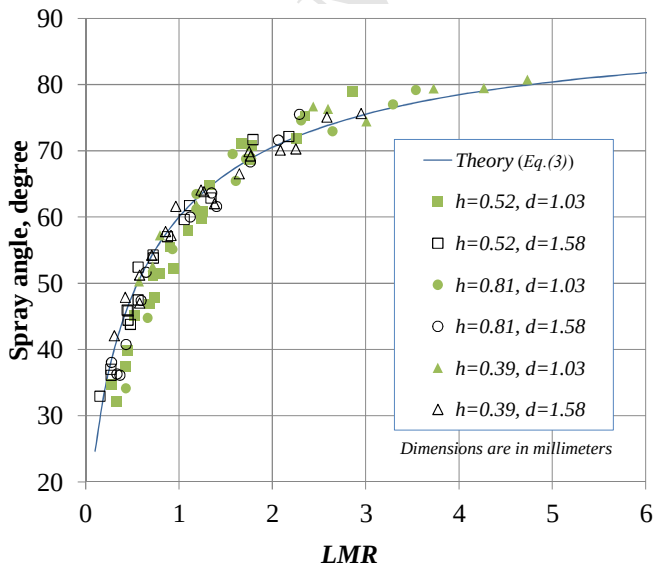

Fig. 7 Spray angle vs. local momentum ratio, including theoretical and experimental results.

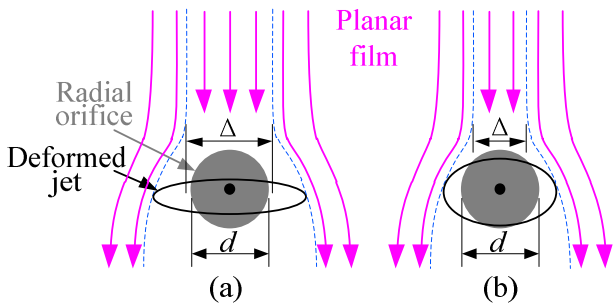

Fig. 8 Sketch of planar film flow over the deformed jet (injected perpendicular to the paper surface) at (a) low *LMR*, (b) high *LMR*.

4.3 Discharge coefficient of the orifice

Because the impingement of jet and film occurs near the exit of the orifice, only the discharge coefficient of the orifice is affected. For different flow rate in the experiments, the discharge coefficients of orifices without the influence of the liquid film almost keep unchanged.

Fig. 9 shows the dependence of the correction factor of discharge coefficient on *LMR* obtained by theory and experiments. It is noted that the theoretical values were calculated by Eq.(13), in which the coefficient *K* was set as constant. Meanwhile, the experimental discharge coefficients were calculated by Eq.(6). Then Cd_j was normalized by Cd_o, leading to the correction factor. As can be seen, the correction factor increases along with *LMR*. Besides, it increases fast for small *LMR* and tends to be stable for large *LMR*. The results indicate that the discharge coefficient is less affected by the liquid film at larger *LMR*, on which condition the momentum of the liquid jet is stronger than the film.

The correction factor also depends on the dimensions of the liquid jet and film. By careful observation, it is found that large film thickness or small jet diameter leads to a larger correction factor. This may result from the deformation of the jet. For a given *LMR*, large film thickness means low velocity of the film and small jet diameter means high velocity of the jet. Both conditions lead to less deformation of the jet. Then less liquid film swerves to the maximum angle. As a result, the correction factor becomes larger.

ACCEPTED MANUSCRIPT

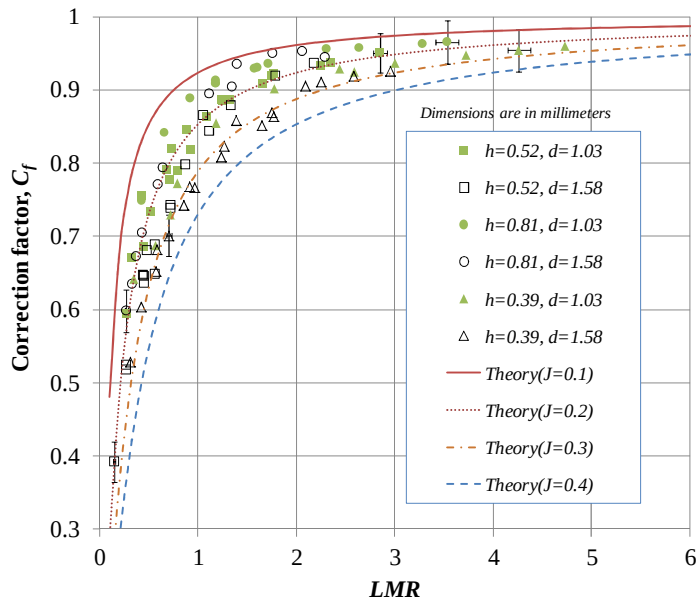

Fig. 9 Correction factor of discharge coefficient (Cd_o=0.8) vs. *LMR*.

It is noted that the hollow triangles coincide with the theoretical curve *(J=0.3)*, as shown in Fig. 8. However, the solid triangles coincide with the theoretical curve *(J=0.3)* at high *LMR* and low *LMR* but the experimental data are larger than the theoretical curve *(J=0.3)* at medium *LMR*. Other experimental data also shows the same feature. This means *J* also depend on the *LMR*.

Now it is clear that *J* depends on *LMR*, film thickness and jet diameter. Therefore, it is assumed that *J* can be written as:

$$J=\left(\frac{d}{h}\right)^{m}\left[a\cdot\exp\left(-3LMR\right)+b\cdot\exp\left(-2LMR\right)+c\cdot\exp\left(-LMR\right)+d\right] \tag{15}$$

where *m*, *a*, *b*, *c* and *d* are constants that can be determined by experimental data.

Based on Eq.(12), we can calculate the coefficient *K* according to experimental data by Eq.(16).

$$J=\frac{LMR}{2}\left(\frac{1}{Cd_j}-\frac{Cd_j}{Cd_o^2}\right) \tag{16}$$

Nonlinear regression analysis of experimental data was conducted. The regression result is shown in Eq.(17) and Fig. 10. A semi-empirical model of discharge coefficient of the orifice with influence of the film is obtained. Then the coefficients of a pintle injector, whose configuration is shown as Fig. 1, are calculated. The diameter of the pintle is 10.4 mm, and the thickness of the annular slot is 0.5 mm. 12 round orifices with diameter of 1.0 mm uniformly distribute in the circumference of the pintle. The operation conditions and the results are listed in Table 1. As can be seen, the calculated discharge coefficients are close to the experimental results and the errors are less than 5%.

$$J=\left(\frac{d}{h}\right)^{0.652}\left[-0.521\cdot\exp\left(-3LMR\right)+0.567\cdot\exp\left(-2LMR\right)-0.145\cdot\exp\left(-LMR\right)+0.128\right] \tag{17}$$

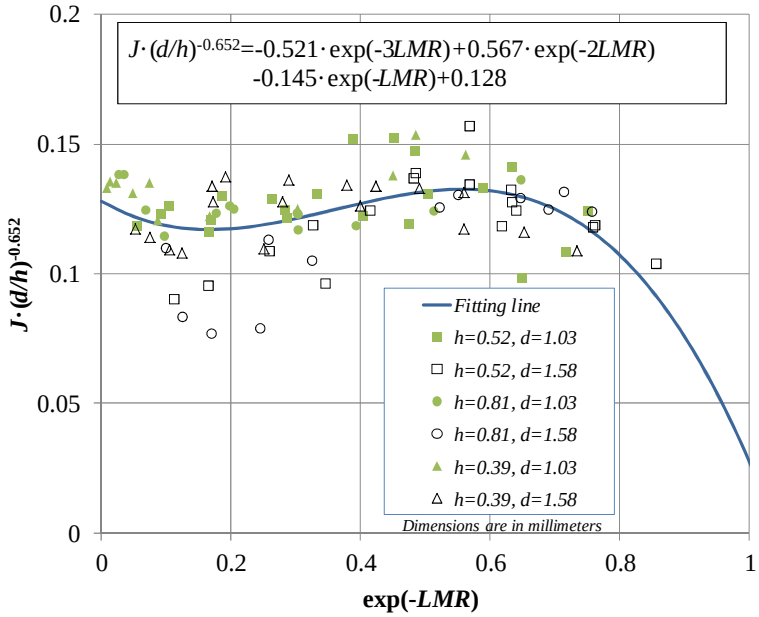

Fig. 10 Nonlinear regression result of coefficient *K*.

Table 1. Calculated and experimental discharge coefficients of a pintle injector

$\dot{m}_j$, g/s	$\dot{m}_f$, g/s	p_j-p_a, MPa	p_f-p_a, MPa	$Cd_{j,\ exp.}$	$Cd_{j,\ cal.}$	Errors
61.3	507	0.142	0.751	0.386	0.381	-1.38%
117	505	0.284	0.756	0.521	0.517	-0.71%
156	501	0.394	0.773	0.590	0.589	-0.08%
197	505	0.561	0.785	0.624	0.647	3.60%

5 Conclusions

In the present study, theoretical analysis and experiments were conducted to investigate the flow characteristics of a pintle injector element, which was simplified based on a pintle injector with discrete orifices.

The pintle injector element produces a cloak-like spray, which is much different from that formed by traditional injectors. The spray pattern and breakup rely heavily on *LMR*, jet Reynolds number and film Reynolds number. A theoretical formula for predicting the spray angle, which benefits the design of pintle injectors, was derived from our previous study and was validated by experiments. The results indicate that the local momentum ratio dominates the spray angle. The spray angle increases along with local momentum ratio. Besides, experimental spray angles are slightly smaller than the theoretical value at low local momentum ratio and greater than that at high local momentum ratio. This difference may be relevant with the extent of deformation of the round jet.

ACCEPTED MANUSCRIPT

The discharge coefficient of the orifice is found to be influenced by the liquid film because the film blocks the jet at the exit of the orifice. A semi-empirical model of discharge coefficient of the orifice was deduced. The results indicate that the discharge coefficient is dominated by the local momentum ratio and increases along with the local momentum ratio. Meanwhile, the ratio of jet diameter to film thickness has minor effects on the discharge coefficient. The discharge coefficient reduces when the ratio of jet diameter to film thickness increases.

Acknowledgments

The support from the National Natural Science Foundation of China (No. 11472303 and 11402298) is greatly appreciated.

Reference

[1] G.A. Dressler, J.M. Bauer, TRW Pintle Engine Heritage and Performance Characteristics, 36th AIAA/ASME/SAE/ASEE Joint Propulsion Conference and Exhibit, American Institute of Aeronautics and Astronautics, Huntsville, Alabama, 2000.

[2] B.L. Austin, S.D. Heister, W.E. Anderson, Characterization of Pintle Engine Performance for Nontoxic Hypergolic Bipropellants, Journal of Propulsion and Power, 21 (2005) 627-635.

[3] S.D. Heister, Pintle Injectors, Handbook of Atomization and Sprays, Springer, New York, 2011.

[4] R.D. Woodward, K.L. Miller, V.G. Bazarov, G.F. Guerin, S. Pal, R.J. Santoro, Injector Research for Shuttle OMS Upgrade Using LOX/Ethanol Propellants, 34th AIAA/ASME/SAE/ASEE Joint Propulsion Conference and Exhibit, 1998.

[5] X.-x. Fang, C.-b. Shen, Study on atomization and combustion characteristics of LOX/methane pintle injectors, Acta Astronautica, 136 (2017) 369-379.

[6] M. Son, K. Radhakrishnan, Y. Yoon, J. Koo, Numerical Study on the Combustion Characteristics of a Fuel-centered Pintle Injector for Methane Rocket Engines, Acta Astronautica, 135 (2017) 139-149.

[7] K. Sakaki, M. Choi, S. Nakaya, M. Tsue, T. Hiraiwa, Fundamental Combustion Characteristics of Ethanol_Liquid Oxygen Rocket Engine Combustor with Planar Pintle-type Injector, Transactions of the Japan Society for Aeronautical and Space Sciences, 58 (2015) 15-22.

[8] R.J. Santoro, C.L. Merkle, Main Chamber and Preburner Injector Technology, The Pennsylvania State University, 1999.

ACCEPTED MANUSCRIPT

[9] K. Sakaki, H. Kakudo, S. Nakaya, M. Tsue, K. Suzuki, R. Kanai, T. Inagawa, T. Hiraiwa, Combustion Characteristics of Ethanol/Liquid-Oxygen Rocket-Engine Combustor with Planar Pintle Injector, Journal of Propulsion and Power, 33 (2017) 514-521.

[10] M. Son, K. Yu, J. Koo, O.C. Kwon, J.S. Kim, Effects of Momentum Ratio and Weber Number on Spray Half Angles of Liquid Controlled Pintle Injector, J. of Thermal Science, 24 (2015) 37-43.

[11] M. Son, K. Yu, K. Radhakrishnan, B. Shin, J. Koo, Verification on Spray Simulation of a Pintle Injector for Liquid Rocket Engine, J. of Thermal Science, 25 (2016) 90-96.

[12] M. Son, K. Radhakrishnan, J. Koo, O.C. Kwon, H.D. Kim, Design Procedure of a Movable Pintle Injector for Liquid Rocket Engines, Journal of Propulsion and Power, 33 (2017) 858-869.

[13] P. Cheng, Q. Li, S. Xu, Z. Kang, On the prediction of spray angle of liquid-liquid pintle injectors, Acta Astronautica, 138 (2017) 145-151.

[14] S. Ninish, A. Vaidyanathan, K. Nandakumar, Spray characteristics of liquid-liquid pintle injector, Experimental Thermal and Fluid Science, 97 (2018) 324-340.

[15] T.J. Tharakan, T.A. Rafeeque, The role of backpressure on discharge coefficient of sharp edged injection orifices, Aerospace Science and Technology, 49 (2016) 269-275.

[16] B. Yu, P.-F. Fu, T. Zhang, H.-C. Zhou, The influence of back pressure on the flow discharge coefficients of plain orifice nozzle, International Journal of Heat and Fluid Flow, 44 (2013).

[17] A. Lichtarowicz, R.K. Duggins, E. Markland, Discharge coefficients for incompressible non-cavitating flow through long orifices, Journal of Mechanical Engineering Science, 7 (1965) 210-219.

[18] Z. Kang, Q. Li, J. Zhang, P. Cheng, Effects of gas liquid ratio on the atomization characteristics of gas-liquid swirl coaxial injectors, Acta Astronautica, 146 (2018) 24-32.

[19] Z. Kang, Z. Wang, Q. Li, P. Cheng, Review on pressure swirl injector in liquid rocket engine, Acta Astronautica, 145 (2018) 174-198.

[20] Q.-f. Fu, R.-z. Duan, K.-d. Cui, L.-j. Yang, Spray of gelled propellants from an impinging-jet injector under different temperatures, Aerospace Science and Technology, 39 (2014) 552-558.

[21] T. Inamura, H. Yanaoka, T. Tomoda, Prediction of Mean Droplet Size of Sprays Issued from Wall Impingement Injector, AIAA Journal, 42 (2004) 614-621.

[22] M. Ahmed, A. Amighi, N. Ashgriz, H.N. Tran, Characteristics of liquid sheets formed by splash plate nozzles, Exp Fluids, 44 (2008) 125-136.

ACCEPTED MANUSCRIPT

ACCEPTED MANUSCRIPT

A theoretical spray angle model was proposed and validated.

A semi-empirical model on the discharge coefficient of the orifice was proposed.

TMR dominates the spray angle and discharge coefficient of the orifice.

ACCEPTED MANUSCRIPT